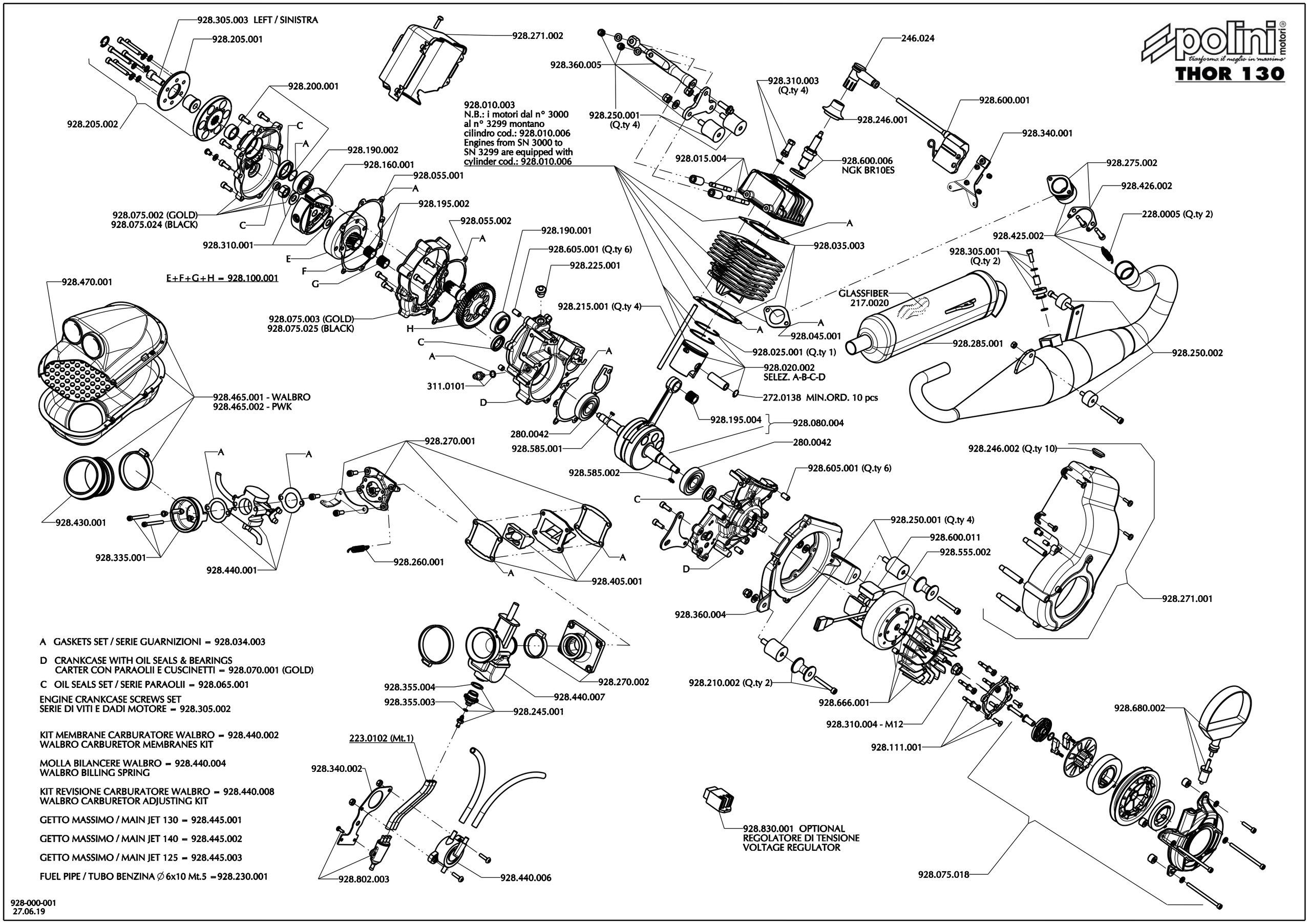
polini motori
trasforma il meglio in massimo
THOR 130
928.305.003 LEFT / SINISTRA
928.205.001
928.205.002
928.200.001
928.271.002
928.360.005
928.250.001 (Q.ty 4)
928.010.003
N.B.: i motori dal n° 3000 al n° 3299 montano cilindro cod.: 928.010.006
Engines from SN 3000 to SN 3299 are equipped with cylinder cod.: 928.010.006
928.310.003 (Q.ty 4)
246.024
928.246.001
928.600.001
928.340.001
928.600.006
NGK BR10ES
928.015.004
928.190.002
928.160.001
928.055.001
928.195.002
928.075.002 (GOLD)
928.075.024 (BLACK)
928.310.001
E+F+G+H = 928.100.001
928.055.002
928.190.001
928.605.001 (Q.ty 6)
928.225.001
928.215.001 (Q.ty 4)
928.075.003 (GOLD)
928.075.025 (BLACK)
311.0101
928.035.003
928.045.001
928.025.001 (Q.ty 1)
928.020.002
SELEZ. A-B-C-D
272.0138 MIN.ORD. 10 pcs
928.195.004
928.080.004
280.0042
928.585.001
928.585.002
928.605.001 (Q.ty 6)
928.275.002
928.426.002
228.0005 (Q.ty 2)
928.425.002
928.305.001 (Q.ty 2)
GLASSFIBER
217.0020
928.285.001
928.250.002
928.470.001
928.465.001 - WALBRO
928.465.002 - PWK
928.430.001
928.335.001
928.440.001
928.270.001
928.260.001
928.405.001
928.250.001 (Q.ty 4)
928.600.011
928.555.002
928.360.004
928.210.002 (Q.ty 2)
928.666.001
928.310.004 - M12
928.111.001
928.246.002 (Q.ty 10)
928.271.001
928.680.002
928.075.018
928.355.004
928.355.003
928.245.001
928.440.007
928.270.002
223.0102 (Mt.1)
928.340.002
928.802.003
928.440.006
928.830.001 OPTIONAL
REGOLATORE DI TENSIONE
VOLTAGE REGULATOR
A GASKETS SET / SERIE GUARNIZIONI = 928.034.003
D CRANKCASE WITH OIL SEALS & BEARINGS
CARTER CON PARAOLII E CUSCINETTI = 928.070.001 (GOLD)
C OIL SEALS SET / SERIE PARAOLII = 928.065.001
ENGINE CRANKCASE SCREWS SET
SERIE DI VITI E DADI MOTORE = 928.305.002
KIT MEMBRANE CARBURATORE WALBRO = 928.440.002
WALBRO CARBURETOR MEMBRANES KIT
MOLLA BILANCERE WALBRO = 928.440.004
WALBRO BILLING SPRING
KIT REVISIONE CARBURATORE WALBRO = 928.440.008
WALBRO CARBURETOR ADJUSTING KIT
GETTO MASSIMO / MAIN JET 130 = 928.445.001
GETTO MASSIMO / MAIN JET 140 = 928.445.002
GETTO MASSIMO / MAIN JET 125 = 928.445.003
FUEL PIPE / TUBO BENZINA ∅ 6x10 Mt.5 =928.230.001
928-000-001
27.06.19

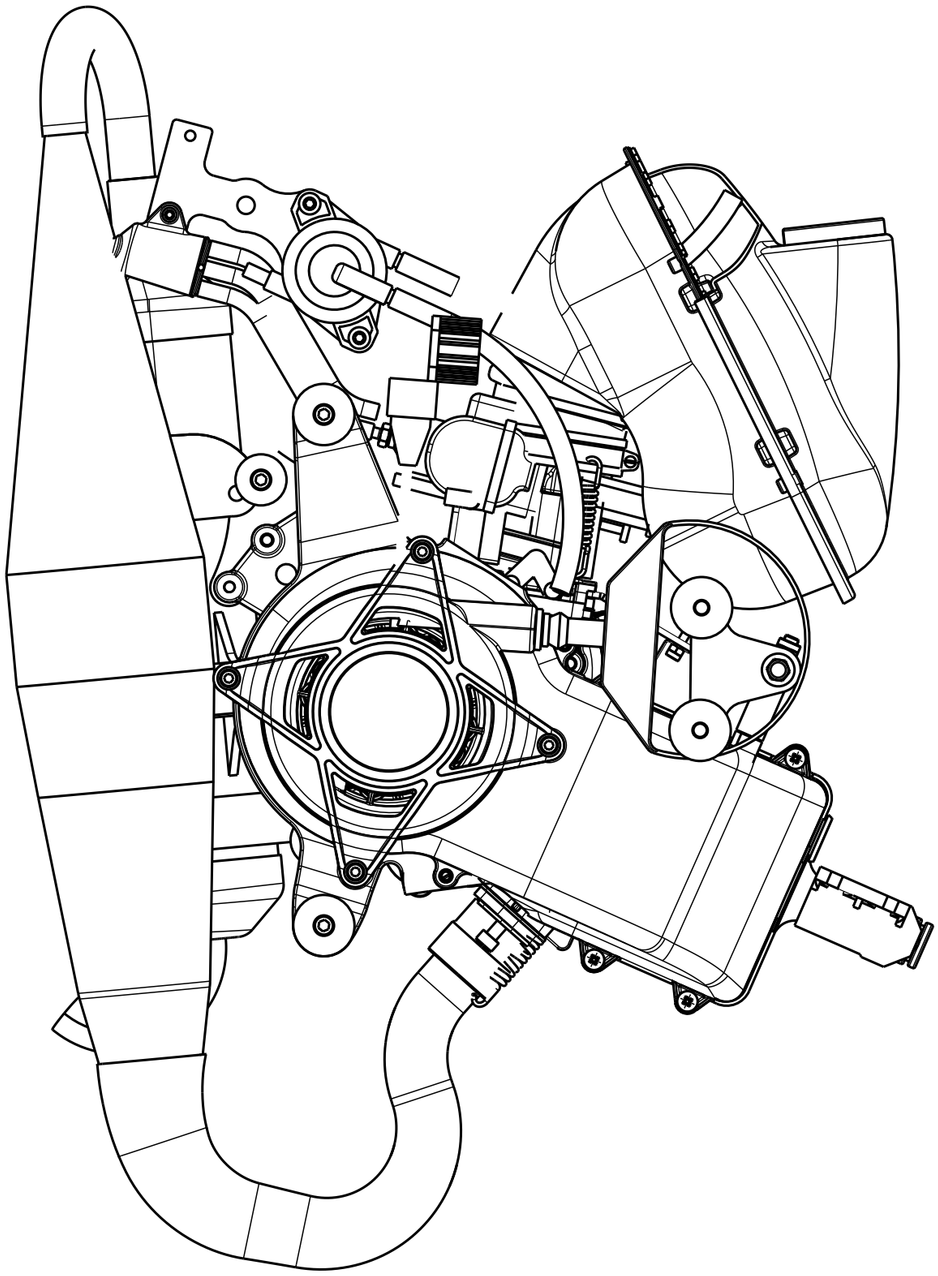

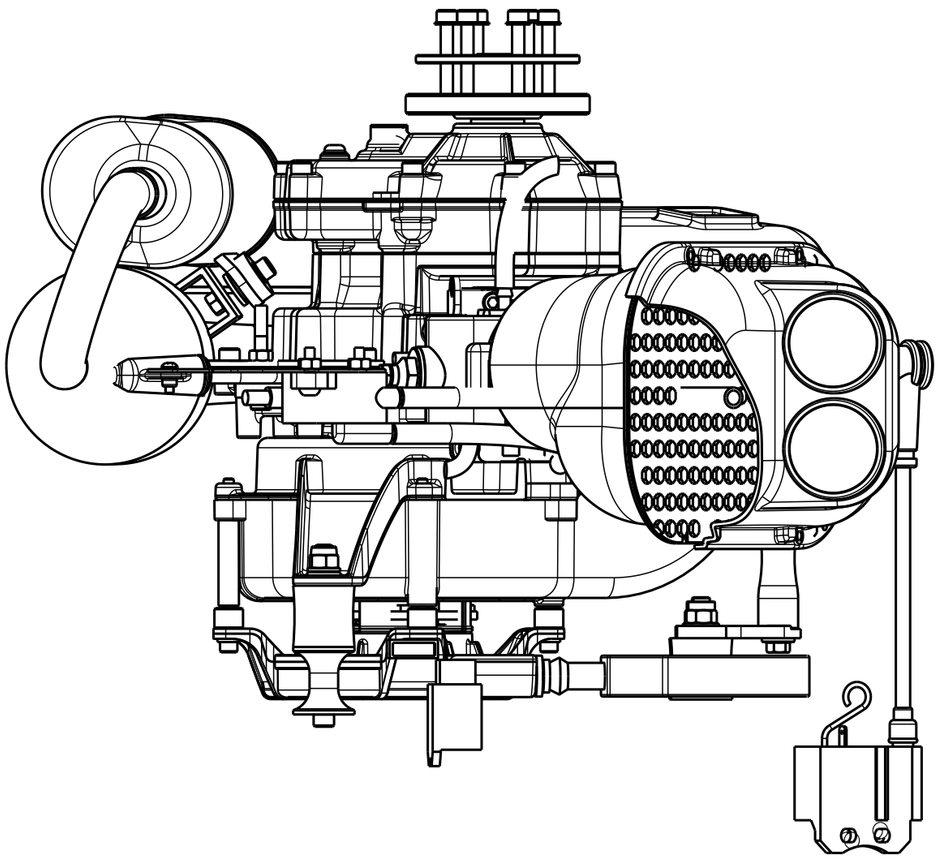

OR