Click on Part Number to Take you to Part

polini motori®
trasforma il meglio in massimo

THOR 202
THOR 260

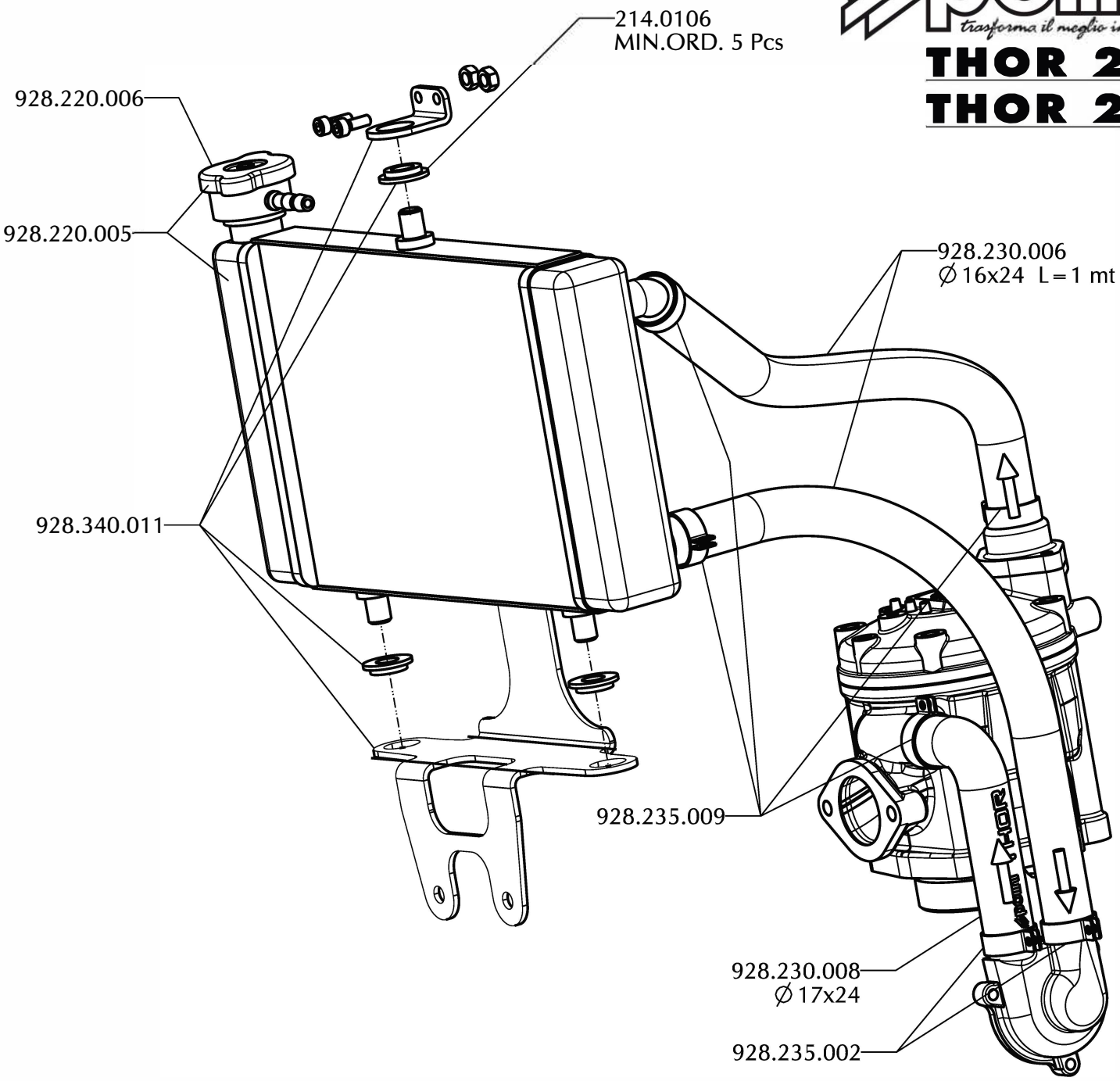

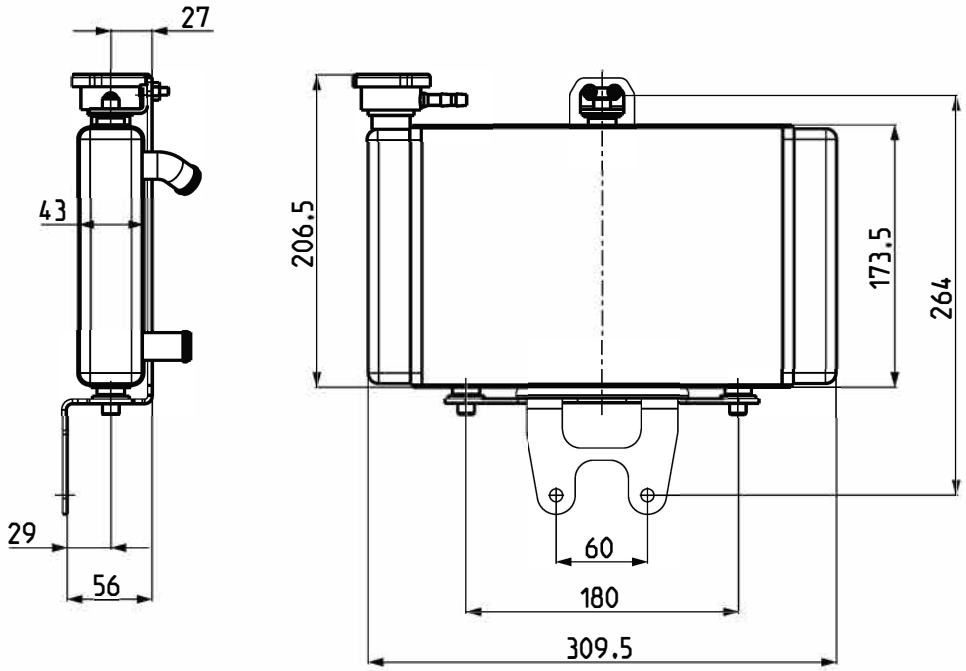

ESP0053-7
11.10.2023